

PETRO SOLIS

Sustainable Process Solutions

SUSTAINABLE PROCESS SOLUTIONS

CARBON CAPTURE & CO_2 RECOVERY SYSTEMS

Petro Solis offers advanced CO_2 Capture and Recovery Systems engineered for industrial decarbonization. Our modular multi-stage solutions combine cooling, denitration, desulfurization, amine absorption, and adsorption polishing to reach CO_2 purities up to 99.9%.

Applications:

Refineries, petrochemical plants, power generation,oil field injection, hydrogen units, and cement facilities.

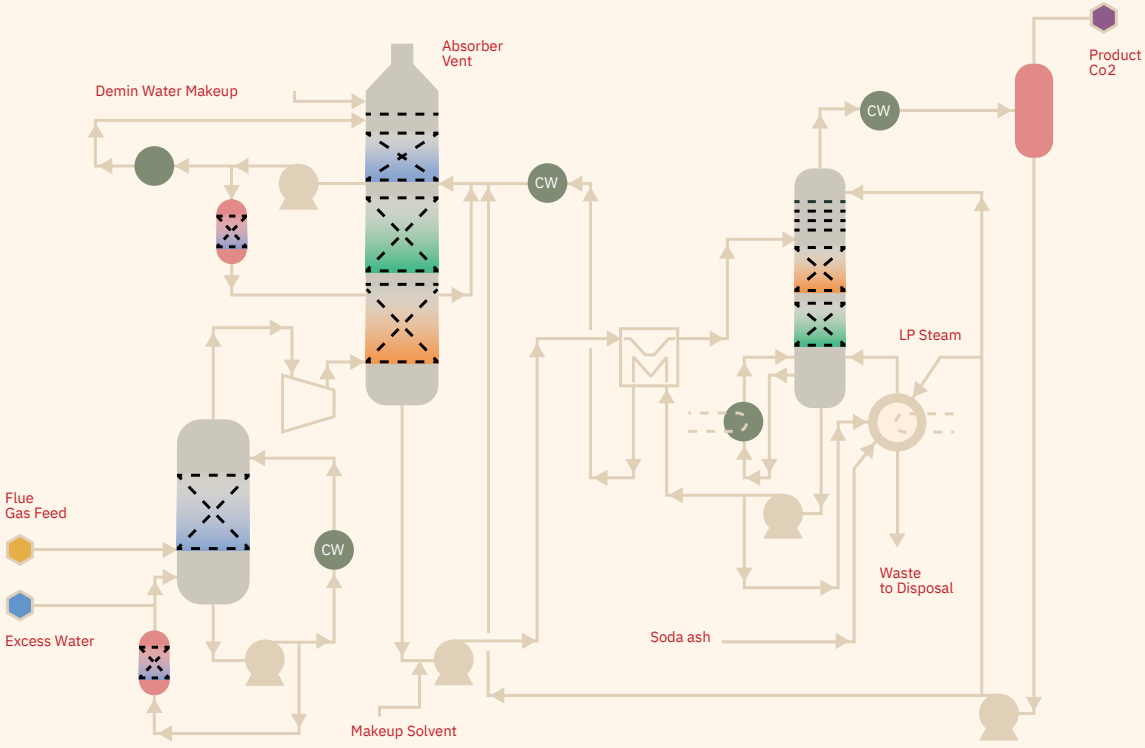

FLARE GAS RECOVERY (FGR) PACKAGES

Petro Solis provides Flare Gas Recovery Systems to convert flared gas to valuable streams while cutting emissions. These solutions combine absorption, dehydration, and adsorption technologies with CAPEX/OPEX-optimized engineering for efficiency and environmental compliance.

Applications:

Upstream fields, refineries, Petrochemical plants and gas processing plants.

GAS DEHYDRATION PACKAGE

Petro Solis offers fully engineered Gas Dehydration Packages designed and fabricated according to client specifications. Each package is a complete skid with process, mechanical, and E&I systems integrated for optimum performance.

Main Components:

Contactor Tower – Regeneration Section including Reboiler, Still column, Reflux condenser,Stripping column, Surge drum, Lean/Rich Exchanger, Circultion Pump, Air Cooler, Filters, Flash Drum all assembled on Skid.

Control System and BMS.

Design Scope:

Process sizing & simulation, PFDs & P&IDs, mechanical design, 3D model, piping layout, instrumentation and control integration (BMS/ESD), FAT, SAT, and commissioning.

Applications:

Onshore/offshore gas treatment, LNG/NGL production, pipeline dehydration, and power plant fuel-gas conditioning.

ADSORPTION PACKAGE (PSA/TSA)

Petro Solis offers PSA and TSA Adsorption Packages for gas purification, drying, and component recovery.
Systems use molecular sieves, activated alumina, silica gel, and activated carbon for high efficiency and low environmental impact.

Applications:

H_2S/CO_2 and moisture removal, hydrogen purification, CO_2 capture polishing, nitrogen generation, and hydrocarbon desulfurization.

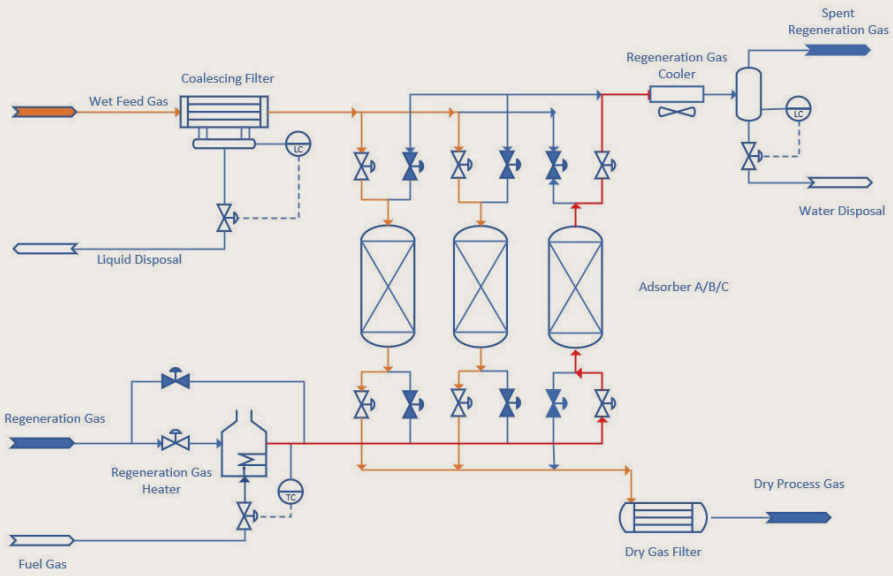

OTHER PROCESS PACKAGES

- Gas Sweetening Units – Amine systems for H_2S and CO_2 removal
- Sulfur Recovery Units – Claus process with >99% recovery efficiency

DIRECT FIRED HEATERS (FURNACES)

Petro Solis designs and manufactures API 560-compliant direct fired heaters for refinery and petrochemical services. Our heaters are designed for high thermal efficiency, low NOx emissions, and reliable long-term operation with advanced BMS and automation systems.

Technical Features:

- Radiant and convection sections, stack, burners, fuel skids, and control systems
- Low-NOx single/dual-fuel burners with high turndown ratio
- Optimized coil arrangement and flue-gas heat recovery
- Refractory lining, advanced materials, and SIL-compliant safety design
- Delivered with full thermal rating, mechanical design, and fabrication package

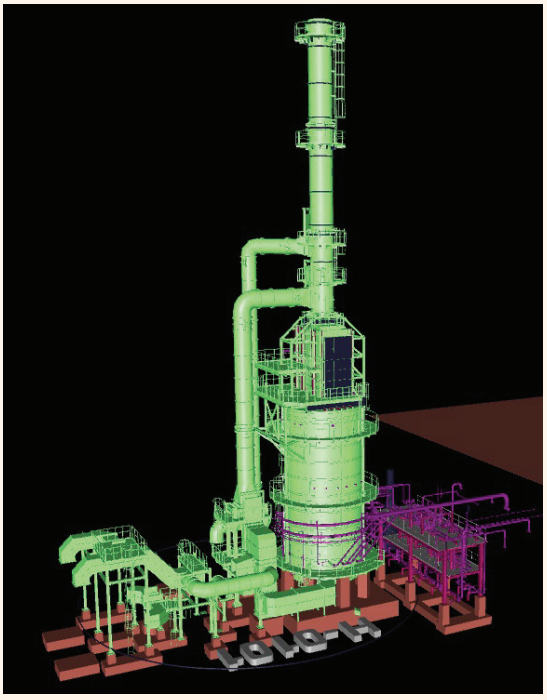

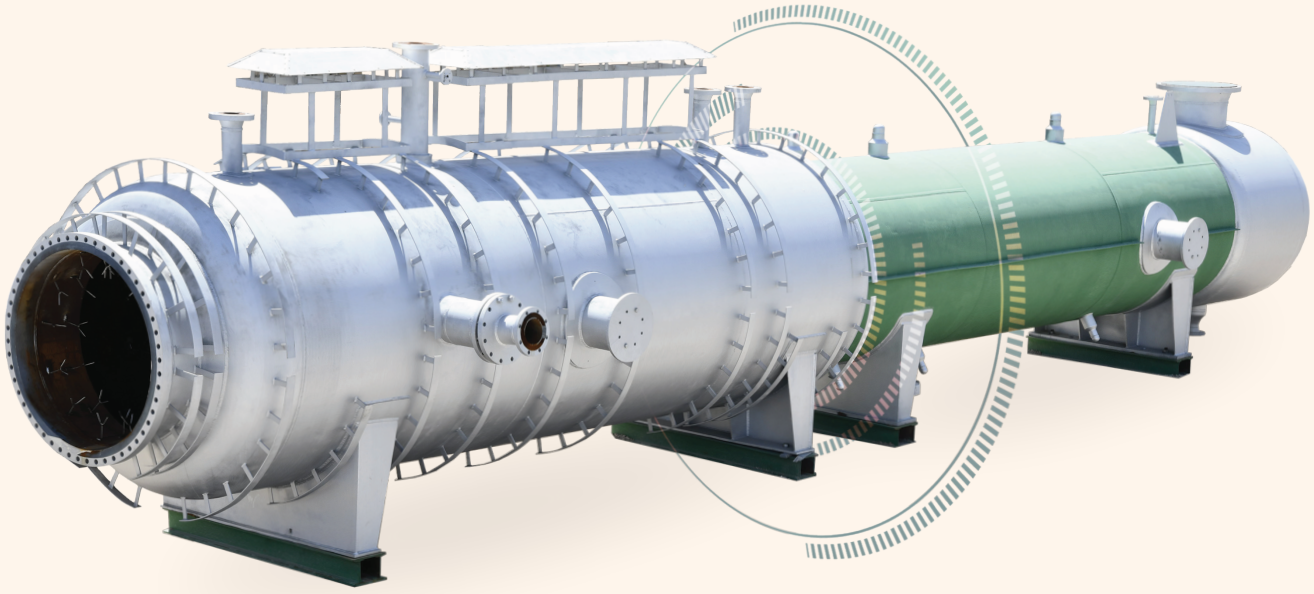

Thermal Reaction Furnace

OTHER EQUIPMENT

- Deaerators – One-tank spray type for oxygen and dissolved gas removal
- Desalters – For crude oil and condensate desalting; complete with electrodes, transformer, mixing valve, and skid-mounted assembly
- Thermal Reaction Furnace, Incinerator, Sulfur Condenser, Re-Heaters
- Waste Heat Boilers – Fire-tube or water-tube designs for heat recovery and steam generation
- Flare Systems – Utility, air-assisted, and steam-assisted types, complete with ignition and safety accessories
- Pressure Vessels, Towers, and Reactors – Up to 600 barg and Ø8000 mm, in CS, SS, and alloys including related Internals
- Shell & Tube Heat Exchangers – TEMA type configuration, Condensers, Reboilers, Evaporators, Double Pipe, Hairpin, Hot Combined Feed Effluent and High Flux Exchangers

ABOUT US

Petro Solis Mühendislik A.Ş. is a Turkish engineering and manufacturing company Specialized in process and mechanical equipment and turnkey process packages for the oil, gas, and petrochemical industries. We provide E, EP, and EPC engineering services fully aligned with the various international standards accepted by end clients and project owners.

We design our process packages both on an Open Art basis—developed entirely by our engineering team—and, where required, in collaboration with world-recognized licensors such as Shell, Axens, UOP, Technip, Topsoe, and Linde, ensuring optimum technical compliance and project performance.

Our network of qualified fabrication partners allows us to maintain high quality, competitive pricing, and timely delivery across projects worldwide.

CORE EXPERTISE

- Process & Mechanical Design
- Skid-Mounted Process Packages
- Equipment Manufacturing & Fabrication
- Installation, Commissioning & After-Sales Services

E. Sales@petrosolis.tr

A. Merkez Mah. Kağıthane Cad.
Y Ofis NO: 5 Kağıthane, İstanbul

W. www.petrosolis.tr